TABLETOP SOAP AND DISINFECTANT DISPENSER WP192-1

Ø 68 x 456 x 170 mm
chrome-plated brass

- Tabletop soap and disinfectant dispenser in chrome-plated brass.
- Solid body in brass; visible surfaces high-gloss chrome-plated. Further available surfaces: see below.
- Design height: 208 mm
  Outlet height: 198 mm
  Projection: 111 mm
- Non-drip pump with 500 ml container in plastics and pressure valve in brass.
- Also available with 1000 ml containers in plastics.
- 500 ml container in stainless steel as an option for a surcharge.
- Designed for standard liquid soaps and disinfectants for hands.
- Refillable from above by unscrewing the top part.
- Wear parts can be replaced as modules.
- Installation dimensions: Ø 22-26 mm, surface thickness max. 40 mm.
- Mounting: With one counternut.
- Delivery includes fixing material.
- Weight, including single package: 1.6 kg



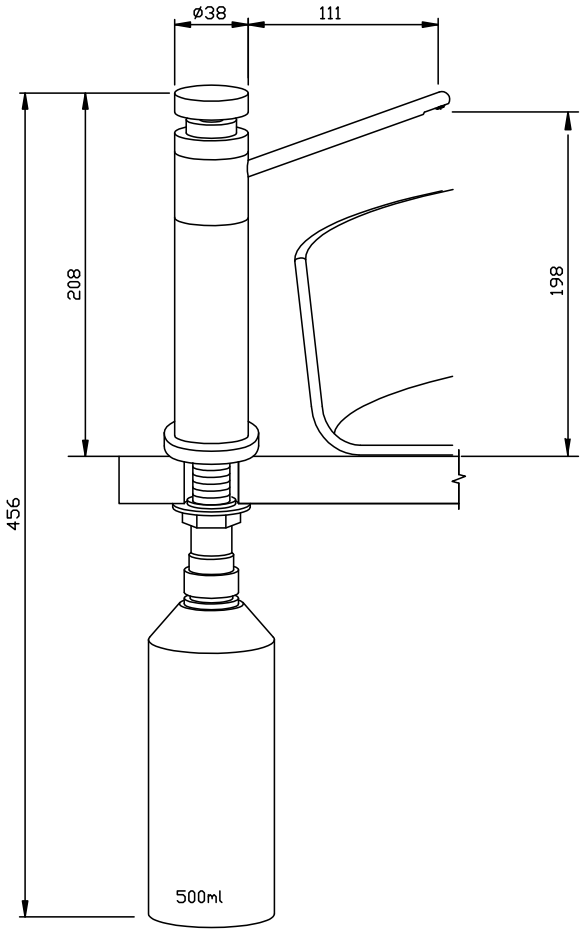

Suggested text for specifications:

Tabletop soap and disinfectant dispenser in chrome-plated brass for counter mounting. Solid body in brass; visible surfaces high-gloss chrome-plated. Non-drip pump with 500 ml container in plastics and pressure valve in brass. Designed for standard liquid soaps and disinfectants for hands. Refillable from above by unscrewing the top part. Delivery includes fixing material.

Dimensions: (with container) 65 x 456 x 160 mm
Design height: 208 mm
Outlet height: 198 mm
Projection: 111 mm

Article No. WP192-1

Options	ID No.
Washer / rosette	923 160

Available surfaces	ID No.
chrome-plated brass (standard)	923 370
coated, matte black	928 370

Ernst Wagner GmbH & Co. KG
Ernst-Abbe-Straße 21 · D-72770 Reutlingen · Tel.: +49712151539-0
info@wagner-ewar.de · www.wagner-ewar.de

(2026/10)