TABLETOP SOAP AND DISINFECTANT DISPENSER WP191-KIDS

A LINE

Ø 68 x 310 x 130 mm
chrome-plated brass



- Tabletop soap and disinfectant dispenser with easy-to-move push button in chrome-plated brass.
- Solid body in brass; visible surfaces high-gloss chrome-plated. Further available surfaces: see below.
- Design height: 62 mm
  Outlet height: 37 mm
  Projection: 74 mm
- Non-drip pump with 500 ml container in plastics and pressure valve in brass.
- Also available with 1000 ml containers in plastics.
- 500 ml container in stainless steel as an option for a surcharge.
- Designed for standard liquid soaps and disinfectants for hands.
- Refillable from above by unscrewing the top part.
- Wear parts can be replaced as modules.
- Installation dimensions: Ø 22-26 mm, surface thickness max. 40 mm.
- Mounting: With one counternut.
- Delivery includes fixing material.
- Weight, including single package: 0.8 kg

Suggested text for specifications:

Tabletop soap and disinfectant dispenser with easy-to-move push button in chrome-plated brass for counter mounting. Solid body in brass; visible surfaces high-gloss chrome-plated. Non-drip pump with 500 ml container in plastics and pressure valve in brass. Designed for standard liquid soaps and disinfectants for hands. Refillable from above by unscrewing the top part. Delivery includes fixing material.

Dimensions: (with container) 65 x 310 x 130 mm
Design height: 62 mm
Outlet height: 37 mm
Projection: 74 mm

Article No. WP191-Kids

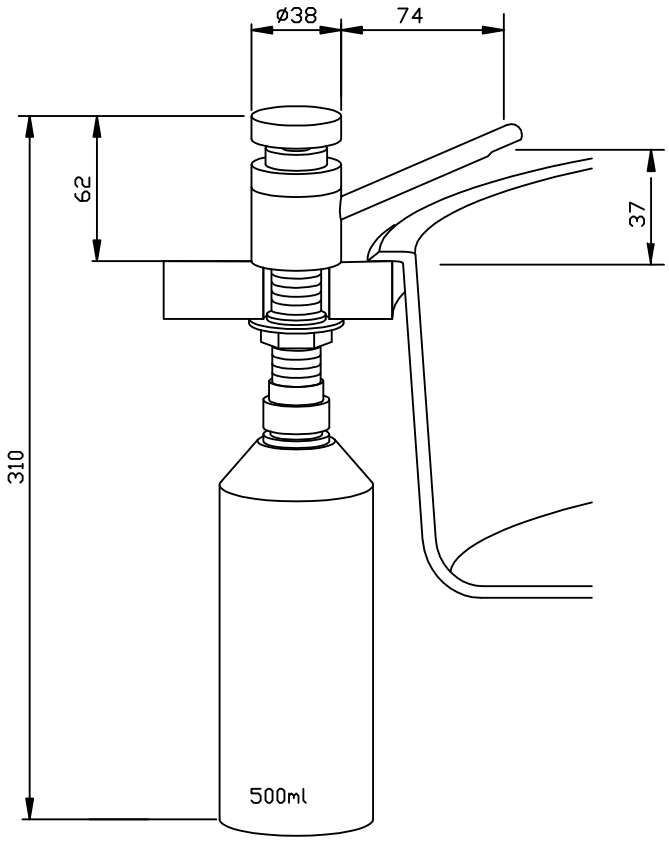

Options	ID No.
Washer / rosette	923 160

Available surfaces	ID No.
chrome-plated brass (standard)	923 943
coated, matte black	928 943

Ernst Wagner GmbH & Co. KG
Ernst-Abbe-Straße 21 · D-72770 Reutlingen · Tel.: +49712151539-0
info@wagner-ewar.de · www.wagner-ewar.de

WAGNER EWAR

(2026/10)