TABLETOP DISINFECTANT DISPENSER WP122-1

68 x 334 x 129 mm
chrome-plated brass



- Tabletop disinfectant dispenser in chrome-plated brass. .
- Solid body in brass; visible surfaces high-gloss chrome-plated. Further available surfaces: see below.
- Design height:86 mm
  Outlet height: 68 mm
  Projection: 76 mm
- Non-drip disinfectant pump with 500 ml disinfectant bottle in plastics and pressure valve in brass.
- Also available with 1000 ml containers in plastics.
- 500 ml container in stainless steel as an option for a surcharge.
- Designed for standard disinfectants for hands.
- Refillable from above by removing the top part.
- Wear parts can be replaced as modules.
- Installation dimensions: Ø 22-26 mm, surface thickness max. 40 mm.
- Mounting: With one counternut.
- Delivery includes fixing material.
- Weight, including single package: 0.6 kg

Suggested text for specifications:

Tabletop disinfectant dispenser in chrome-plated brass for counter mounting. Solid body in brass; visible surfaces high-gloss chrome-plated. Non-drip disinfectant pump with 500 ml disinfectant bottle in plastics and pressure valve in brass. Designed for standard disinfectants for hands. Refillable from above by removing the top part. Delivery includes fixing material.

Dimensions: (with container) 68 x 334 x 129 mm
Design height: 86 mm
Outlet height: 68 mm
Projection: 76 mm

Article No. WP122-1

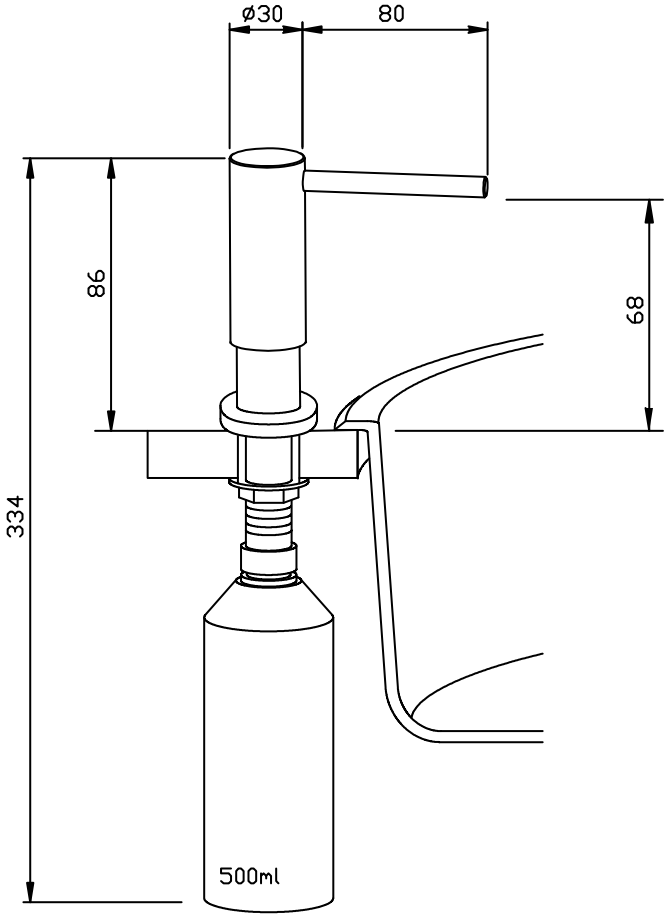

Available surfaces	ID No.
chrome-plated brass (standard)	923 339
coated, matte black	928 339

Ernst Wagner GmbH & Co. KG
Ernst-Abbe-Straße 21 · D-72770 Reutlingen · Tel.: +49712151539-0
info@wagner-ewar.de · www.wagner-ewar.de

(2026/10)