HINGED SUPPORT RAIL BF670

600-850 mm

- Hinged support rail in robust, germ-reducing and easy-care stainless steel (AISI 304), satin finished.
- Outer diameter of tubes 32 mm for ergonomic hold, bend radii 75 mm.
- Full metal hinge with individually adjustable brake.
- Wall mountings with 6-point mounting plate, 90 x 250 x 4 mm, and with 2K-wall sealing-disc.
- Supports weight up to 125 kg.
- Fastening concealed by self-locking wall cover.
- TÜV-certified in accordance with ISO 17966:2016.
- Mounting: With six screws.
- Fixing material available as accessories for different kinds of walls.
- Intermediate sizes available upon request.

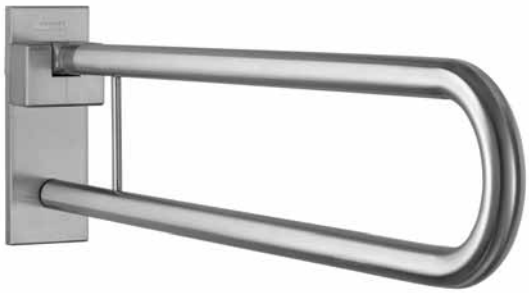

Suggested text for specifications:

Hinged support rail in stainless steel (AISI 304), outer diameter of tubes 32 mm, surface satin finished. Full metal hinge with individually adjustable brake. Wall mountings with 6-point mounting plate, 90 x 250 x 4 mm, and with 2K-wall sealing-disc; supports weight up to 125 kg. Fastening concealed by self-locking wall cover. TÜV-certified in accordance with ISO 17966:2016.

Length ..... mm

Article No. BF670

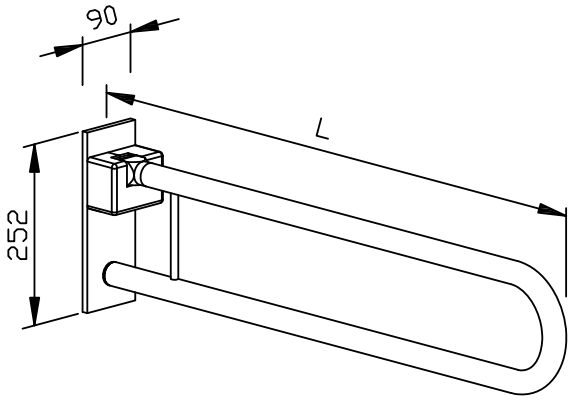

Options	ID No.
Toilet roll holder BA010	600 010
Pre-installed fixing plate with cover BA017	600 017
Toilet flush and call device BA020	600 020
Toilet flush device BA063	600 063

Accessories fixing material / wall structure	ID No.
Wood	923 210
Concrete (>B15)	923 211
Light concrete/gas concrete/vertical coring bricks	923 212

Available surface	Length / ID No.		
	600 mm	700 mm	850 mm
satin finished (standard)	670 100	670 200	670 300

Ernst Wagner GmbH & Co. KG
Ernst-Abbe-Straße 21 · D-72770 Reutlingen · Tel.: +49712151539-0 · Fax: -20
info@wagner-ewar.de · www.wagner-ewar.de

WAGNER EWAR