ANGLED GRAB RAIL 135° BF635

700 mm



- Angled grab rail 135° in robust, germ-reducing and easy-care stainless steel (AISI 304), satin finished.
- Outer diameter of tubes 32 mm for ergonomic hold, clearance from wall 106 mm, bend radii 75 mm.
- Wall mountings with 8-point mounting plate – can be freely rotated, 4 mm thick with 2K-wall sealing-disc.
- Supports weight up to 125 kg.
- Concealed fixings 75 mm in diameter, anti-theft, with silicone sealing ring at tube joint.
- TÜV-certified in accordance with ISO 17966:2016.
- Mounting: With six screws.
- Delivery includes fixing material.
- Intermediate sizes available upon request.

Suggested text for specifications:

Angled grab rail 135° in stainless steel (AISI 304), outer diameter of tubes 32 mm, clearance from wall 106 mm, surface satin finished. Wall mountings with 8-point mounting plate – can be freely rotated, 4 mm thick with 2K-wall sealing-disc; supports weight up to 125 kg. Concealed fixings 75 mm in diameter, anti-theft, with silicone sealing ring at tube joint. TÜV-certified in accordance with ISO 17966:2016. Delivery includes fixing material.

Version: left / right

Length 700 x Height 150 mm

Article No. BF635

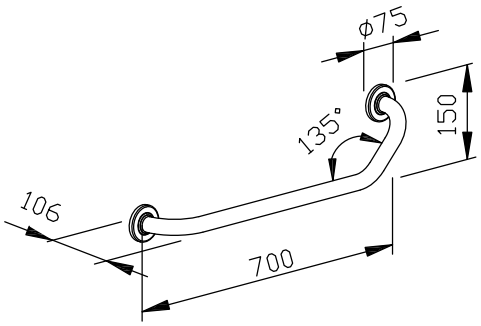

Available surface	Length / ID No.	
	700 mm left	700 mm right
satin finished (standard)	635 100	635 200

Ernst Wagner GmbH & Co. KG
Ernst-Abbe-Straße 21 · D-72770 Reutlingen · Tel.: +49712151539-0 · Fax: -20
info@wagner-ewar.de · www.wagner-ewar.de

WAGNER EWAR