# ANGLED GRAB RAIL 90° BF620

**650 x 350-750 x 400 mm**

- Angled grab rail 90° in robust, germ-reducing and easy-care stainless steel (AISI 304), satin finished.
- Outer diameter of tubes 32 mm for ergonomic hold, clearance from wall 106 mm, bend radii 75 mm.
- Wall mountings with 8-point mounting plate – can be freely rotated, 4 mm thick with 2K-wall sealing-disc.
- Supports weight up to 125 kg.
- Concealed fixings 75 mm in diameter, anti-theft, with silicone sealing ring at tube joint.
- TÜV-certified in accordance with DIN EN 12182.
- Mounting: With nine screws.
- Delivery includes fixing material.
- Intermediate sizes available upon request.



**Suggested text for specifications:**

Angled grab rail 90° in stainless steel (AISI 304), outer diameter of tubes 32 mm, clearance from wall 106 mm, surface satin finished. Wall mountings with 8-point mounting plate – can be freely rotated, 4 mm thick with 2K-wall sealing-disc; supports weight up to 125 kg. Concealed fixings 75 mm in diameter, anti-theft, with silicone sealing ring at tube joint. TÜV-certified in accordance with ISO 17966:2016. Delivery includes fixing material.

Version: left / right

Length ..... x Height ..... mm

Article No. BF620

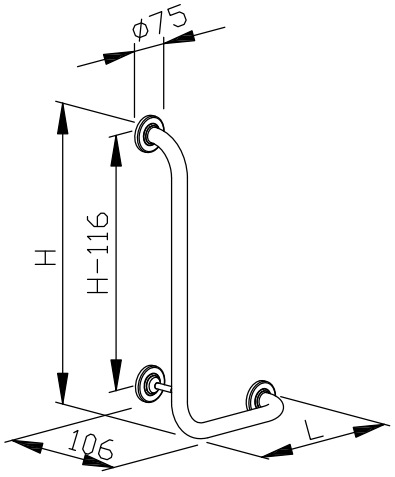


| Available surface | Length x Height / ID No. | | | |
|---|---|---|---|---|
| | 650 x 350 mm left | 650 x 350 mm right | 750 x 400 mm left | 750 x 400 mm right |
| satin finished (standard) | 620 100 | 620 200 | 620 300 | 620 400 |

**Ernst Wagner GmbH & Co. KG**
Ernst-Abbe-Straße 21 · D-72770 Reutlingen · Tel.: +49712151539-0 · Fax: -20
info@wagner-ewar.de · www.wagner-ewar.de

WAGNER EWAR