BINOPTIC deck-mounted electronic soap dispenser

Ref. 512121P

Liquid or foam soap dispenser



DESCRIPTION

BINOPTIC deck-mounted electronic soap dispenser - Ref. 512121P

Deck-mounted electronic soap dispenser.
Liquid or foam soap dispenser.
No manual contact: hands are automatically detected by infrared cell.
Spout made from chrome-plated 304 stainless steel.
No waste pump dispenser.
Separate electronic unit for installation under the basin.
Automatic soap dispenser: mains supply with 230/6V transformer.
For vegetable-based liquid soap with a maximum viscosity of 3,000 mPa.s or 3,000cP, or specialist foam soap.
Spout length: 105mm.
Supplied with a flexible tube 1.20m long for remote tanks (tank not suppied).
30-year warranty.
CE marked.

ADVANTAGES

- Total hygiene: no manual contact
- Comfort: automatic soap dispenser
- No waste pump dispenser
- Liquid or foam soap

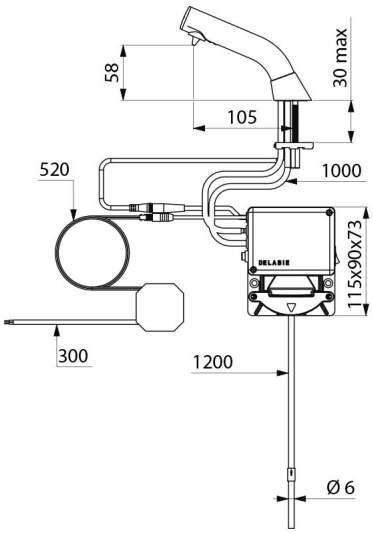

TECHNICAL CHARACTERISTICS

BINOPTIC deck-mounted electronic soap dispenser - Ref. 512121P

Supply	Mains supply 230/6V
Technology	Infrared sensor
Length	Tube: 1.2m
Drop height	58mm
Spout length	105mm
Finish	Chrome-plated 304 stainless steel
Norms	CE
Warranty	30 YEAR WARRANTY
Repairability	50 YEARS REPAIRABILITY

© DELABIE