NOVALAB laboratory single lever mixer, swivel spout for water (WPC/WPH) with hygienic flushing, connection hoses G3/8"



Attributes

- Long operating lever
- All-metal valve body, EPS-coated, grey RAL 7035
- Ceramic mixing cartridge with temperature limiter
- Nominal pressure 8 bar
- Mounting thread M32x1, - 35 mm lang
- With mounting set
- Integrated programmable control electronics (selectable flush times and intervals)
- Hygienic flushing device with integrated solenoid valve cartridge for cyclical flushing of the cold and hot water pipe over the spout

Variants	Art.-No.:
H = 200 mm Power supply: battery with hose tail connector	**70 2164 15 37**
H = 200 mm Power supply: battery with aerator	**70 2135 15 37**
H = 300 mm Power supply: battery with hose tail connector	**70 3134 15 37**
H = 300 mm Power supply: battery with aerator	**70 3135 15 37**
H = 200 mm Power supply: plug-in power supply with hose tail connector	**70 2136 15 37**
H = 200 mm Power supply: plug-in power supply with aerator	**70 2137 15 37**
H = 300 mm Power supply: plug-in power supply with hose tail connector	**70 3136 15 37**
H = 300 mm Power supply: plug-in power supply with aerator	**70 3137 15 37**

Dimensional Drawings

Art.-No.: 70 2164 15 37

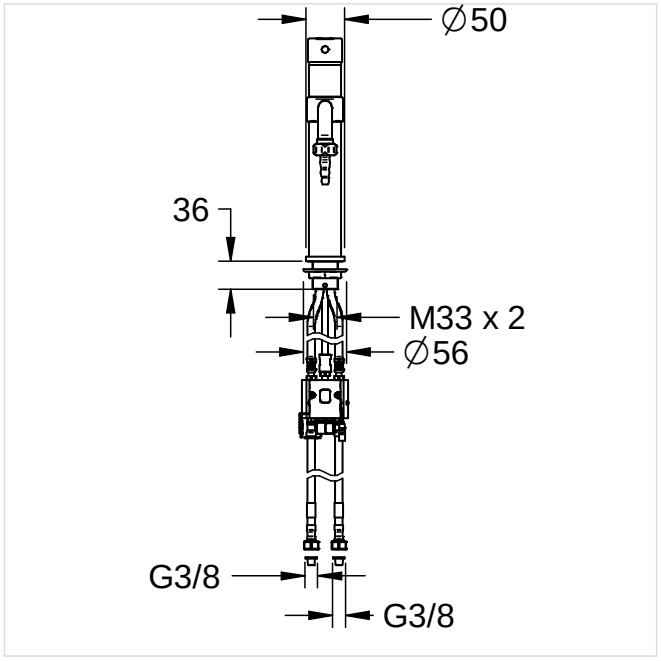

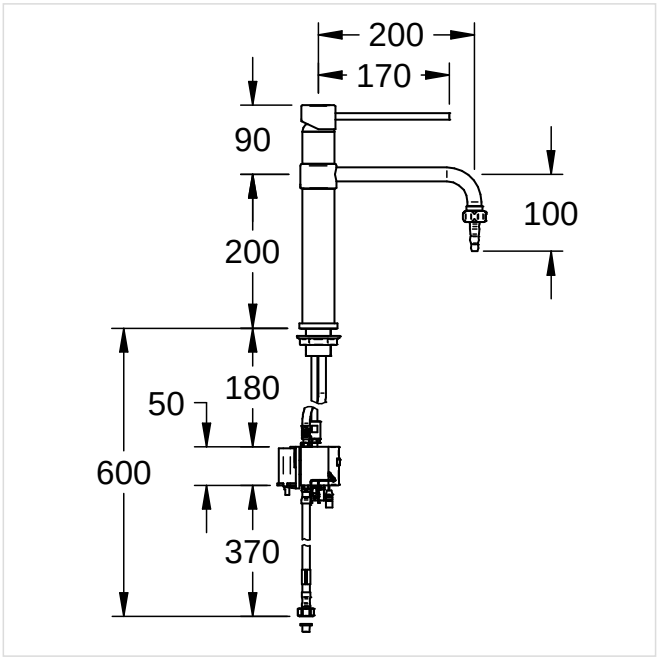

Art.-No.: 70 2135 15 37

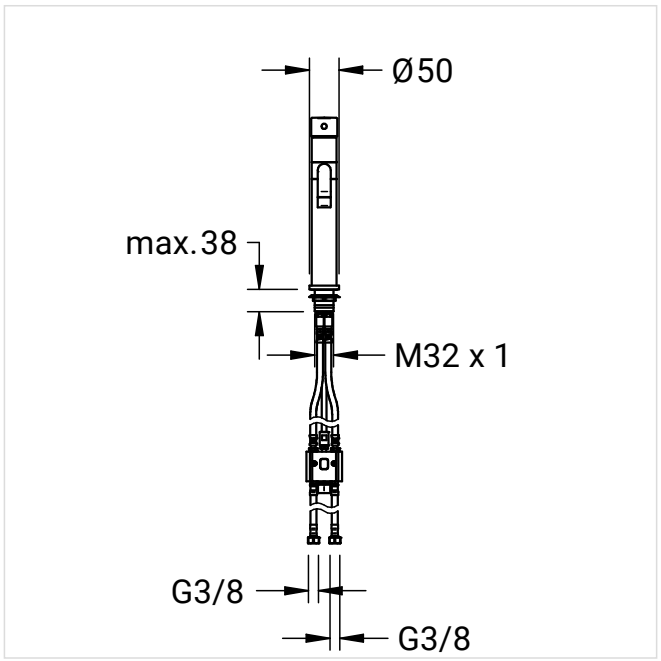

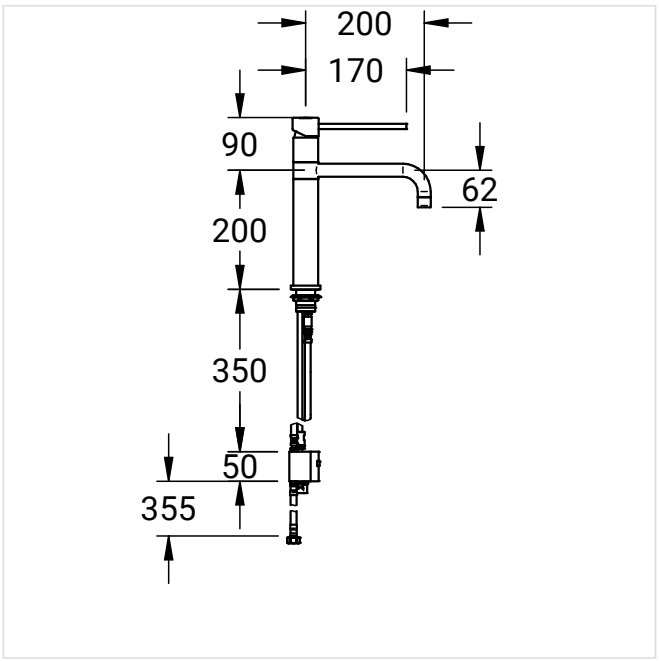

Art.-No.: 70 3134 15 37

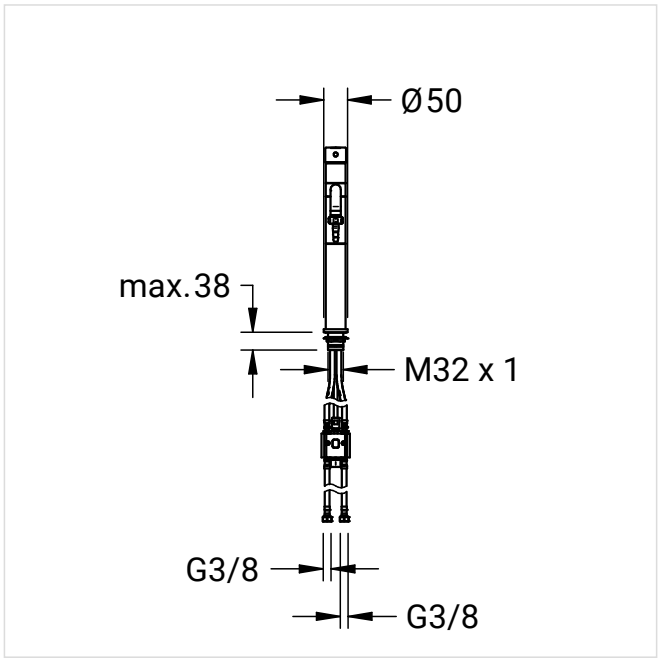

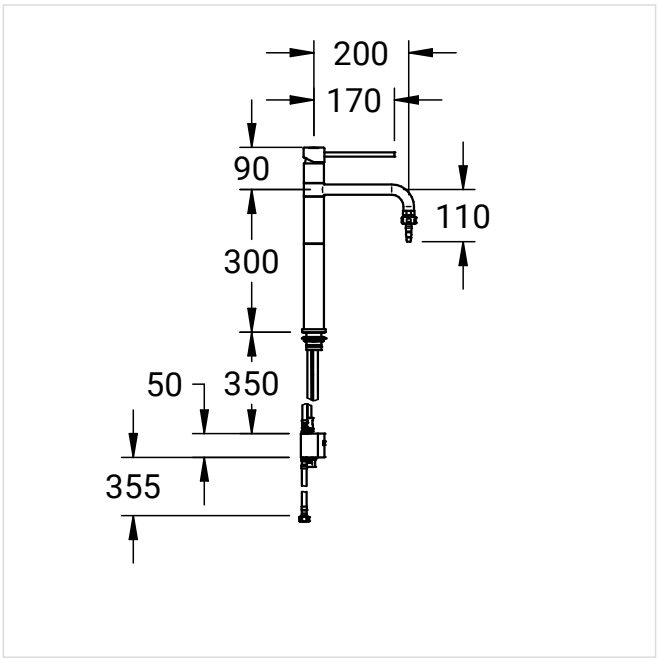

Art.-No.: 70 3135 15 37

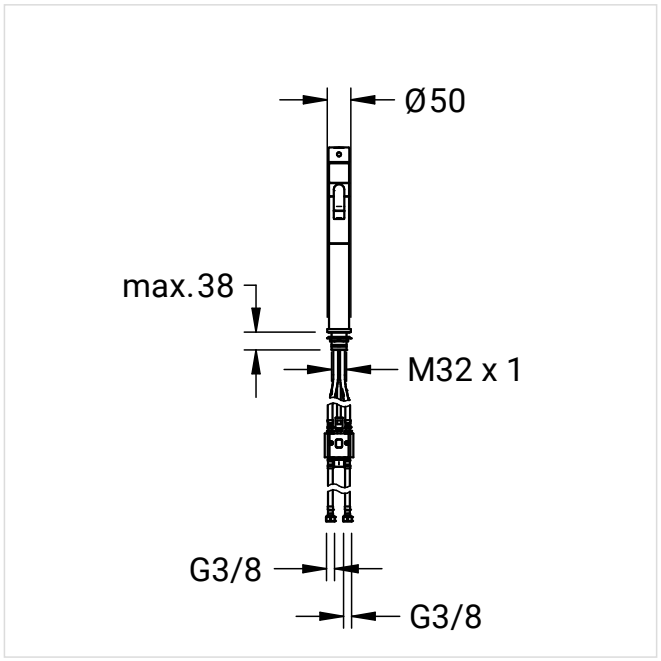

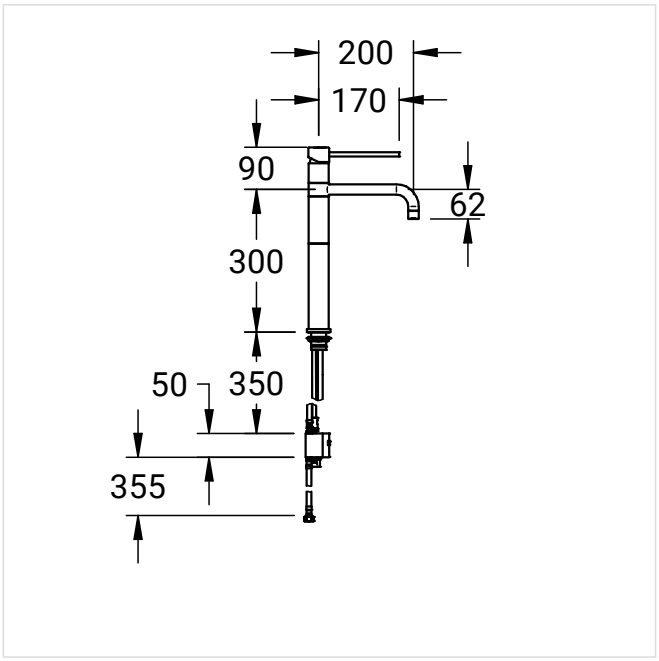

Further product images



Art.-No.: 70 2135 15 37