GAMCO
Commercial Restroom Accessories
Technical Data

COUNTER-MOUNTED, AUTOMATIC, TOP-FILL BULK SOAP DISPENSERS

G-8258 (LIQUID)
G-8248 (FOAM)

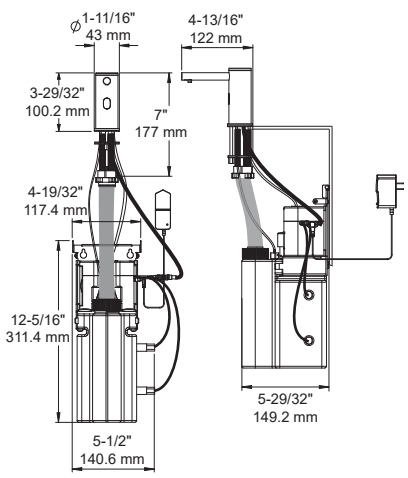

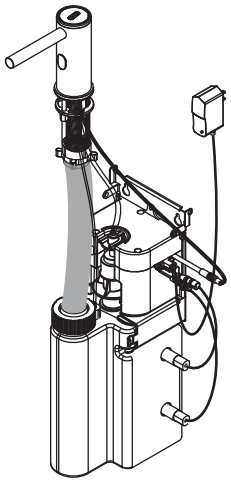

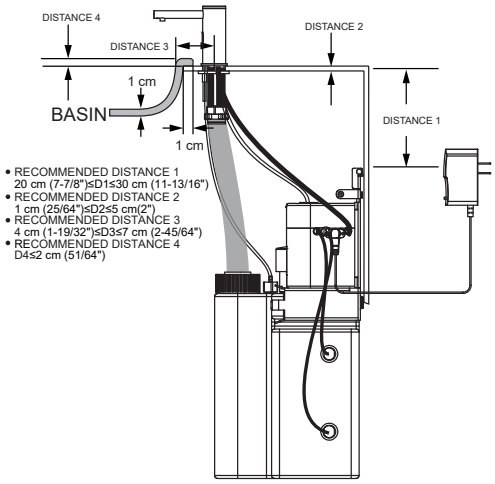

MATERIALS:

Spout and Stem Assembly — Above the counter, bright polished 304 stainless steel spout with integral stem. Vandal-resistant spout has a locked fill port cap that opens with a special funnel key and is also used for top filling the dispenser with soap. Soap refill tube connects the stem to the soap tank below the counter. Spout and Stem Assembly includes a sensor wire that connects to the electronic control box, soap tube that connects to the pump, and venting tube that connects to the soap tank below the counter. Integrated to the spout are a dispense tip and activation sensor housing.

Soap Reservoir Tank — Polypropylene plastic. Capacity: 50.7 fl oz (1.5 L).

Pump and Soap Delivery System — Soap Reservoir Tank has a pump and electronic control box that pumps the soap through the soap tube to spout.

6V AC Adapter — Powered by 6V AC Adapter that is included. Optional Battery Pack available through Bobrick, order Part No. 824-241. Battery Pack uses 4 “D” cell batteries (not included). For outlets not compatible with U.S. plugs, order Part No. 3974-58.

OPERATION:

To fill the dispenser, insert the notched edge of the funnel into the key slot on the fill port cap and rotate counterclockwise. With the fill port cap removed, insert the funnel into the opening and rotate clockwise. Then pour the soap through the funnel. When the soap level is low, the LED ring light will blink green. When the soap tank is filled to 85%, the LED ring light will stop blinking and be replaced by an intermittent buzzer sound to indicate sufficient soap level to prevent overfilling.

To activate the dispenser, place hand below spout in front of the IR sensor. Green LED will light up briefly when dispensing. For liquid soap dispenser, spout dispenses 1 to 1.5 ml of liquid soap per dispense. For foam soap dispenser, spout dispenses 0.6 to 0.8 ml of foam soap per dispense.

The LED ring light will display a solid green light if the wrong kind of soap has been used:

- For liquid soap dispenser: Dispenses liquid soap with a viscosity of 1 cP to 3,000 cP (centipoise).
- For foam soap dispenser: Dispenses foam soap with a viscosity of 1 cP to 50 cP (centipoise).

INSTALLATION:

Unit is designed for installation into counters up to 2″ (50 mm) maximum thickness with 1-1/2″ (38 mm) diameter mounting hole, and compatible with sink rims up to 25/64″ (10 mm) wide and 51/64″ (20 mm) tall. Recommended spout location is minimum of 1-19/32″ (40 mm) and maximum of 2-45/64″ (70 mm) from inside edge of the sink rim to the center of the mounting hole, and minimum clearance of 1-49/64″ (45 mm) from the center of mounting hole to the back of the wall. Below the counter, install the soap tank and pump assembly at the rear wall with the included screws and wall anchors, keeping a minimum of 7-7/8″ (200 mm) and maximum of 11-13/16″ (300 mm) vertical clearance from the bottom of the countertop to the mounting screw location. Provide backing in wall as specified in accordance with local building codes. Plug AC Adapter into wall and end of plug into power port on the pump assembly.

SPECIFICATION:

Counter-Mounted, Automatic, Top-Fill Bulk Soap Dispensers shall dispense commercially marketed all-purpose bulk hand soaps. Spout assembly shall be bright polished 304 stainless steel spout with integral stem to accommodate up to 2″ (50 mm) thick counter tops. Vandal-resistant spout has a locked fill port cap that opens with a special funnel key and is used for top filling the dispenser with soap. Unit shall have LED ring light indicator to show when unit has been activated, low soap level, and a refill warning buzzer will sound when the soap tank is 85% full to prevent overfilling. Unit is equipped with IR Sensor that activates to dispense soap when hand is placed in the sensor activation zone. Unit is powered by and comes with 6V AC Adapter. Optional Battery Pack available through Bobrick, order Part No. 824-241. Battery Pack uses 4 “D” cell batteries (not included). For outlets not compatible with U.S. plugs, order Part No. 3974-58.

Counter-Mounted, Automatic, Top-Fill Bulk Soap Dispensers shall be models G-8258 (Liquid) / G-8248 (Foam) of Gamco Commercial Restroom Accessories, One Gamco Place, Durant, OK, 74701-1910

The illustrations and descriptions herein are applicable to production as of the date of this Technical Data Sheet.
The manufacturer reserves the right to, and does from time to time, make changes and improvements in designs and dimensions.

© 2022 by Gamco Commercial Restroom Accessories