NOVALAB laboratory bench mounted tap with swivel U spout for fully demineralized water (WDC), connection thread G3/8"

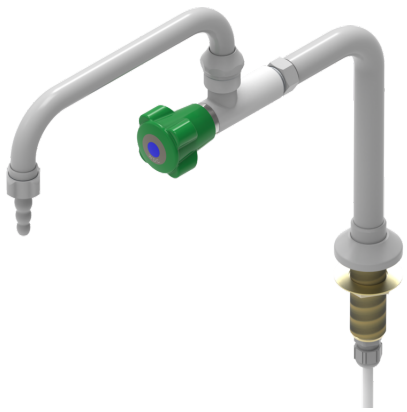

Attributes

- Supply PE-hose 8 mm lenght 1 mtr, connection thread G3/8"
- Temperature range 0- 95 °C
- Valve body high-performance plastic PVDF, grey RAL 7035
- Four-wing ergonomic operating handle according to DIN 13792
- Headwork made of high-performance plastic
- Nominal pressure PN 10 bar
- Mounting thread G3/4" - 70 mm long
- Hose nozzle diameter 10/13 mm
- With mounting set

Variants	Art.-No.:
Höhe H = 200 mm	**70 2175 35 47**
Hight H = 300 mm	**70 3175 35 47**

Dimensional Drawings

Art.-No.: 70 2175 35 47

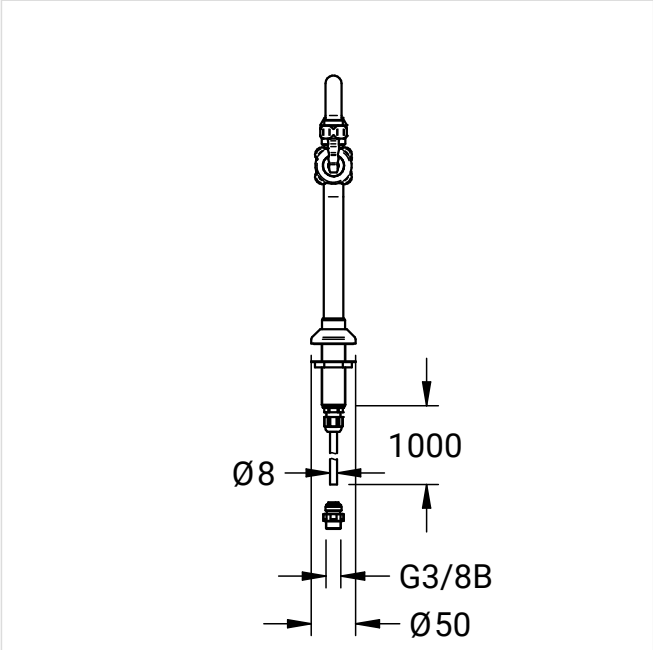

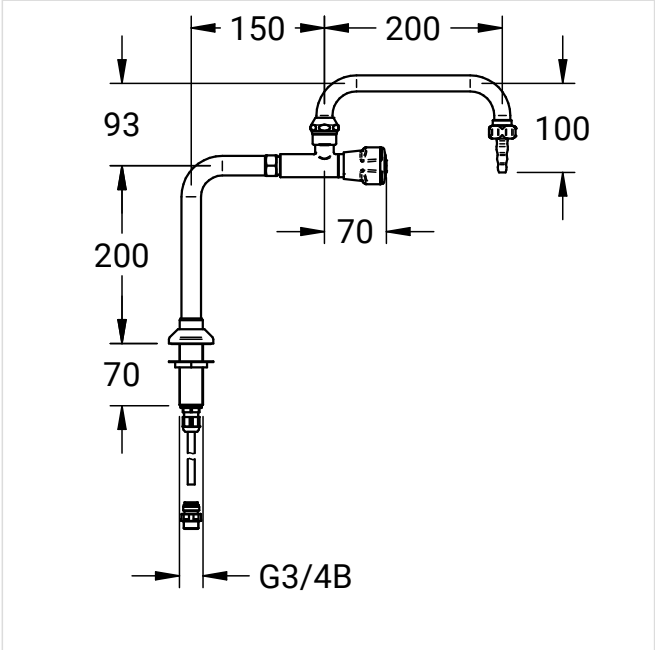

NovaLab GmbH
Brunsbütteler Damm 446
13591 Berlin

Phone +49 (0) 30 36 403 36 20
Fax +49 (0) 30 36 403 36 26
Mail: info@novalab-gmbh.de

Art.-No.: 70 3175 35 47

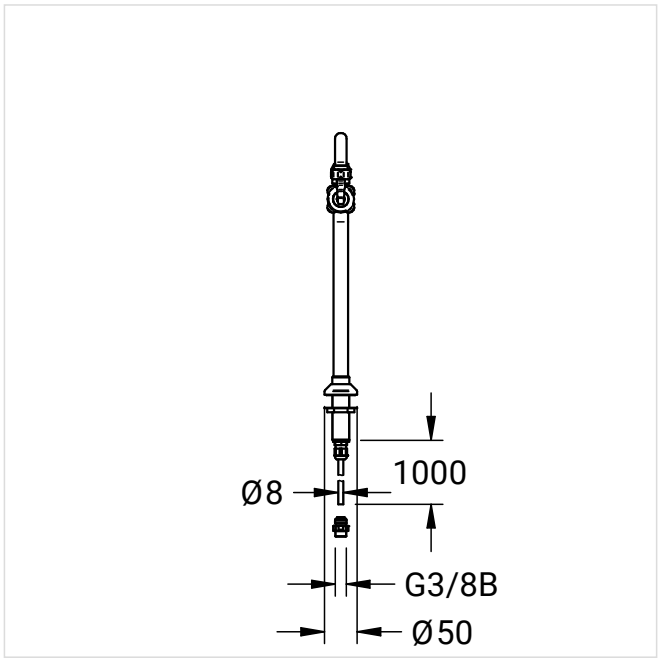

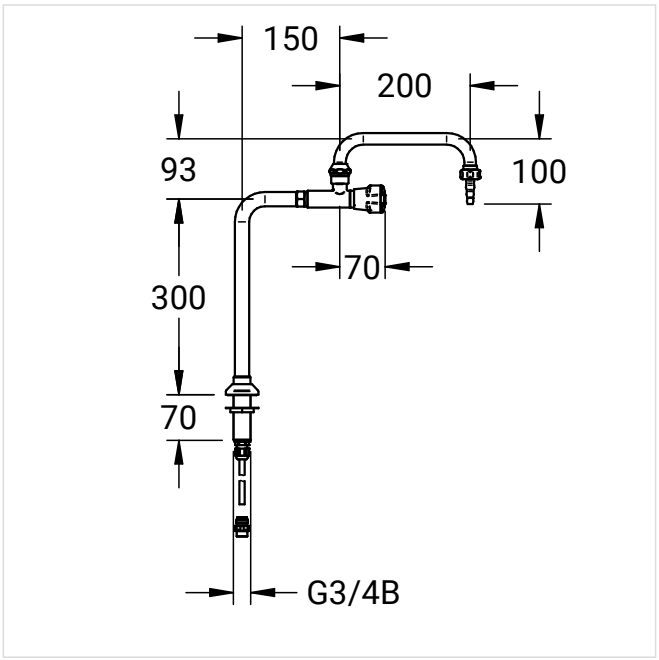

Further product images

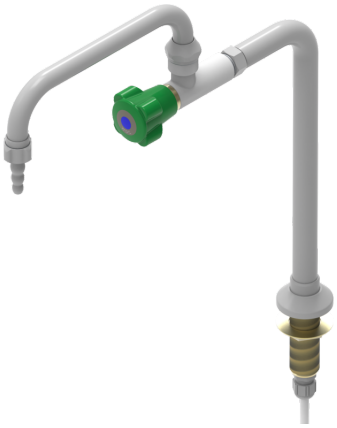

Art.-No.: 70 3175 35 47