Hygo XL



Attributes

- LED signal for low fill level
- Waste water pump for easy emptying of the tank
- Power supply via 110-230 V
- Water-saving tap for more than 150 wash cycles
- Water and waste water tank, 30 litres each
- Stationary water connection/drain not required
- Touch-free hand washing with infrared-controlled tap

Variants	Art.-No.:
	40 02

Dimensional Drawings

Art.-No.: 40 02



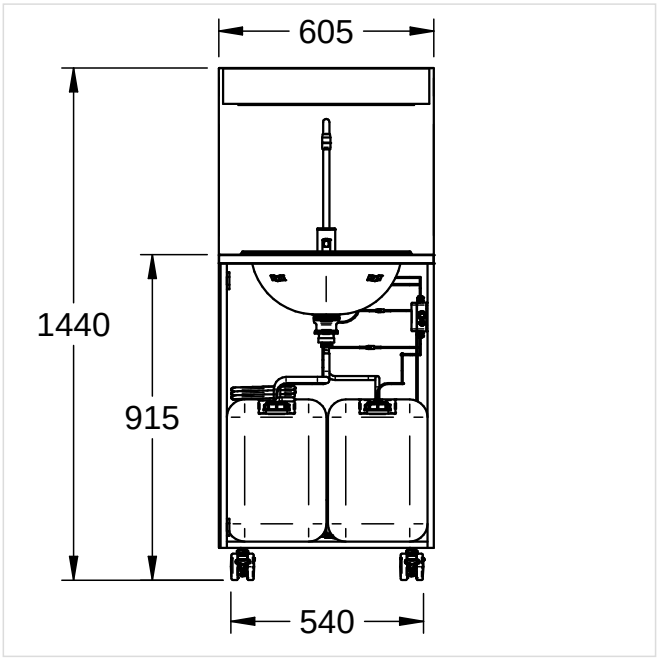

NovaLab GmbH
Brunsbütteler Damm 446
13591 Berlin

Phone +49 (0) 30 36 403 36 20
Fax +49 (0) 30 36 403 36 26
Mail: info@novalab-gmbh.de

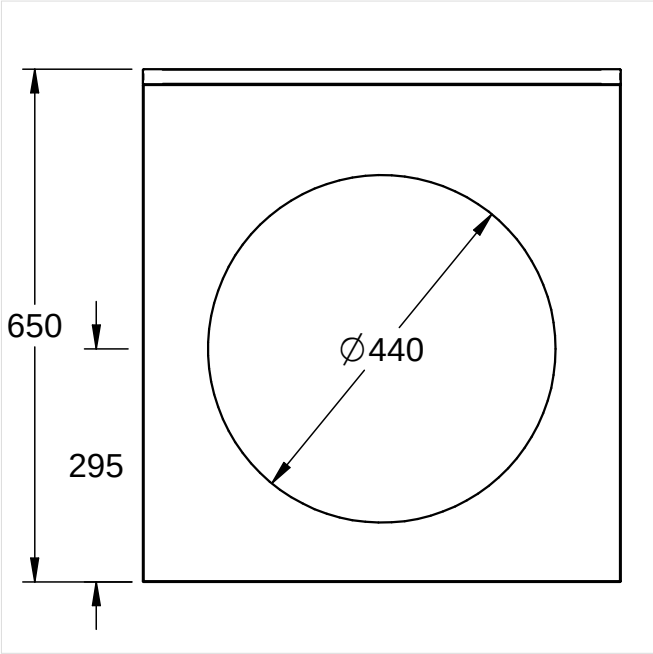

NovaLab GmbH
Brunsbütteler Damm 446
13591 Berlin

Phone +49 (0) 30 36 403 36 20
Fax +49 (0) 30 36 403 36 26
Mail: info@novalab-gmbh.de